REVISIONS			
REV	ECR	DATE	APPROVED

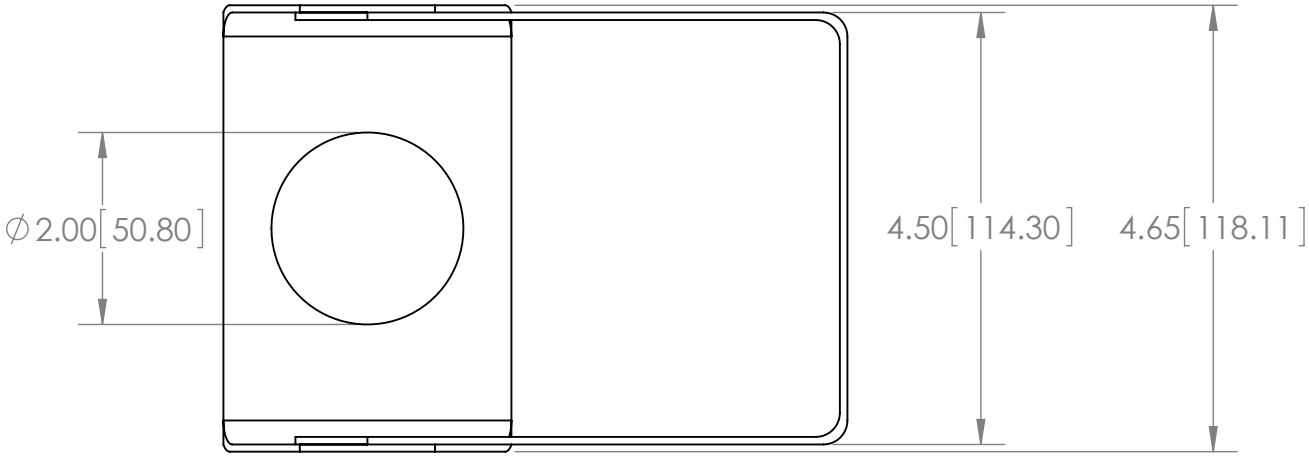

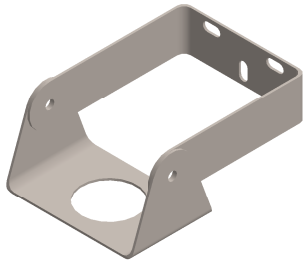

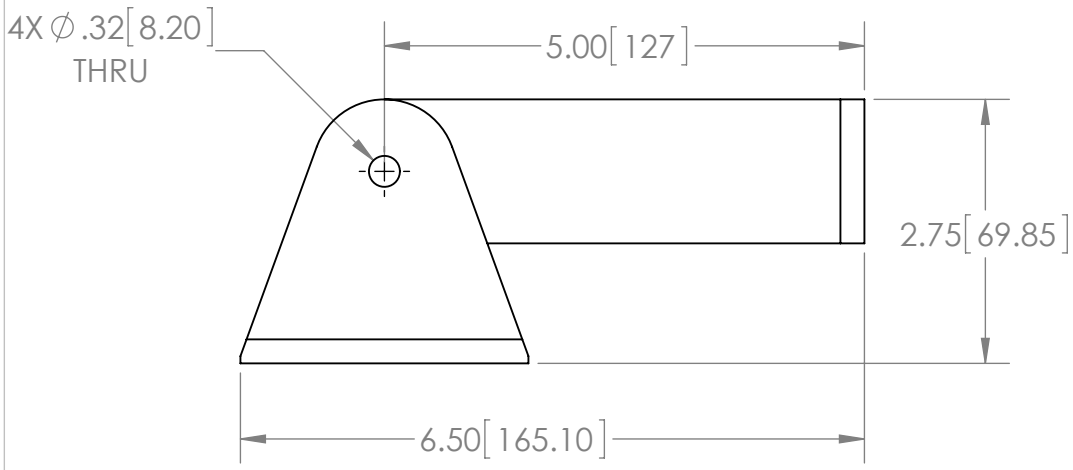

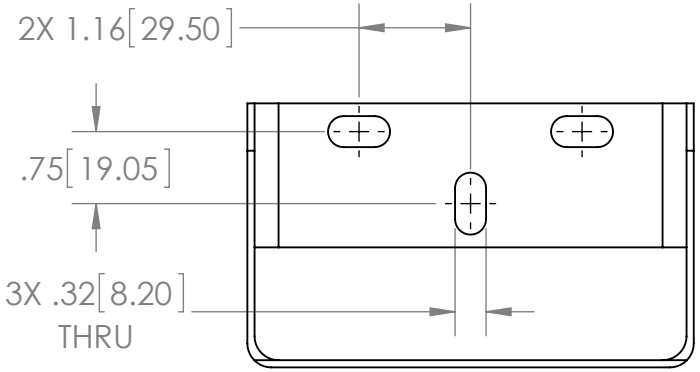

Flowline Part Numbers
LM50-3S31 = short bracket, 1 1/2" NPT lock nut, 316L
LM50-4S31 = short bracket, 1 1/2" G lock nut, 316L

THE INFORMATION CONTAINED IN THIS DRAWING IS THE PROPERTY OF FLOWLINE INC. UNLESS OTHERWISE AUTHORIZED IN WRITING BY FLOWLINE INC.. THIS DRAWING IS ALSO PROHIBITED BY UNITED STATES COPYRIGHT LAWS AND COPYING OR DUPLICATION OF THE INFORMATION ON THIS DRAWING IS NOT ALLOWED UNLESS AUTHORIZED IN WRITING BY FLOWLINE INC. © FLOWLINE INC., 2000

UNLESS OTHERWISE SPECIFIED:
DIMENSIONS ARE IN INCHES[MM]
TOLERANCES:
FRACTIONAL ±
ANGULAR: MACH ± BEND ±
TWO PLACE DECIMAL ±
THREE PLACE DECIMAL ±

INTERPRET GEOMETRIC TOLERANCING PER:

MATERIAL
SS316

FINISH

DO NOT SCALE DRAWING

AUTOCAD DRAWING NUMBER:

	NAME	DATE
DRAWN	MJR	07/03/23
CHECKED		
ENG APPR.		
MFG APPR.		
Q.A.		

FLOWLINE LEVEL BEST
10500 HUMBOLT LOS ALAMITOS, CALIFORNIA 90720 T(562) 598-3015 F(562) 431-8507

TITLE:
BRACKET OUTLINE DRAWING

SIZE	DWG. NO.	REV
A	210737	A

SCALE: WEIGHT: SHEET 1 OF 1

5 4 3 2 1